4.5 CASSETTE LAUTEX WM-600

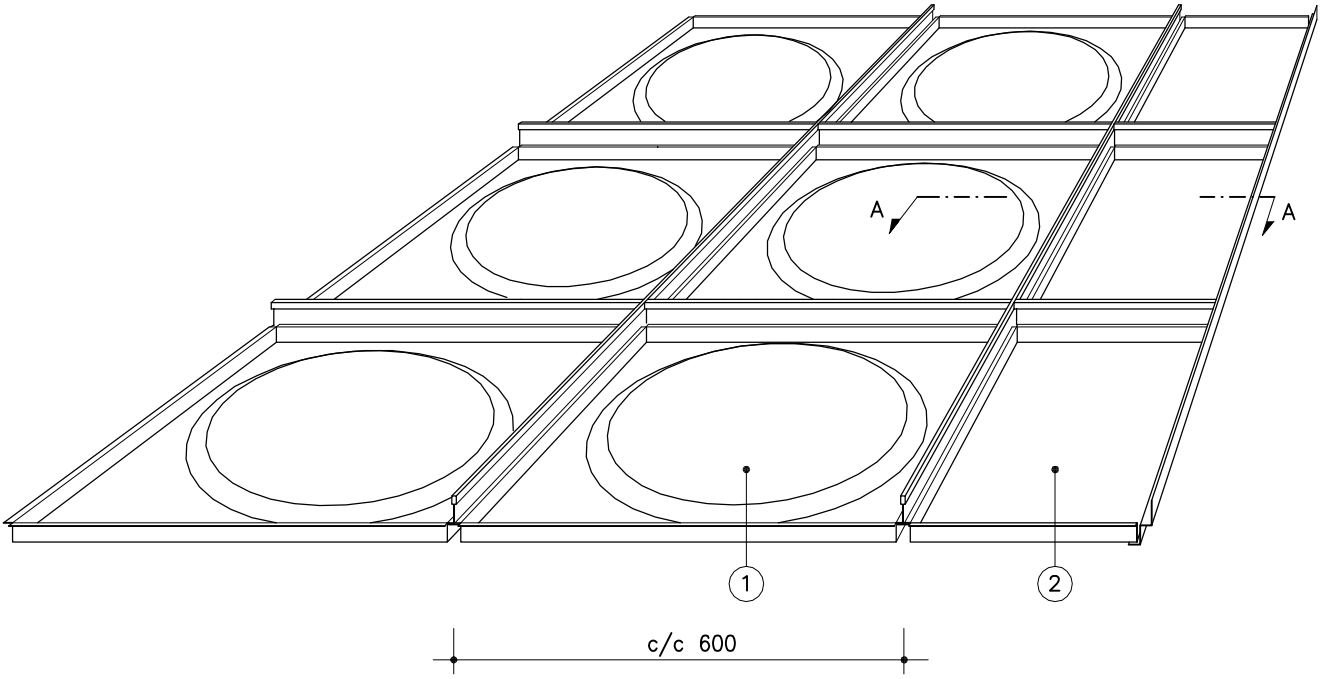

A - A

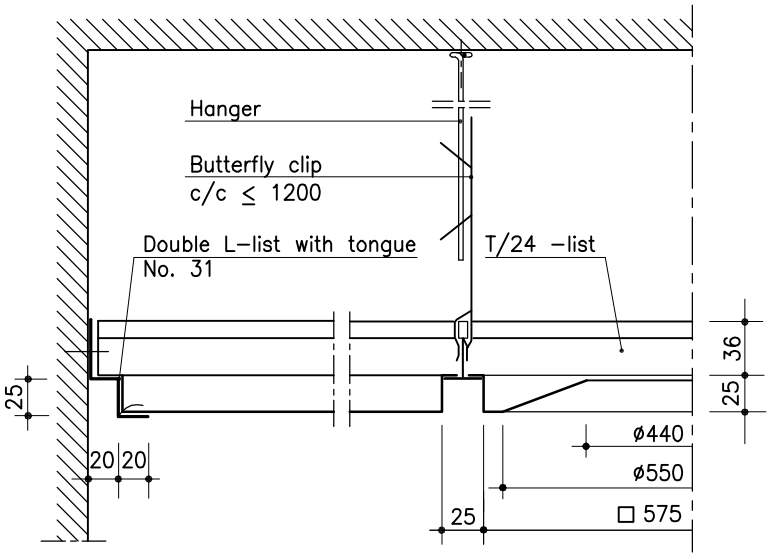

(1) = WM; unperforated, no inlay

(2) = NM–600; flat fitting cassette (Al)

STANDARD WM-CASSETTE

Material	0.5 mm Fe
Module size	600 x 600 mm
Height	25 mm
Perforation	–
Inlay	–
Finish	stove enamelling
Fitting cassette	NM–600, leaflet 4.2 (Al)
Special solutions	Please contact our technical information department

STRUCTURAL DETAILS SEE LEAFLET 6.1

All products are subjects to modifications without prior notice.
2001

OY LAUTEX AB
P.O. Box 58 FIN-03101 Nummela Finland
Tel +358 (0)9 224 8810 Fax +358 (0)9 222 5447
E-mail: sales@lautex.com www.lautex.com